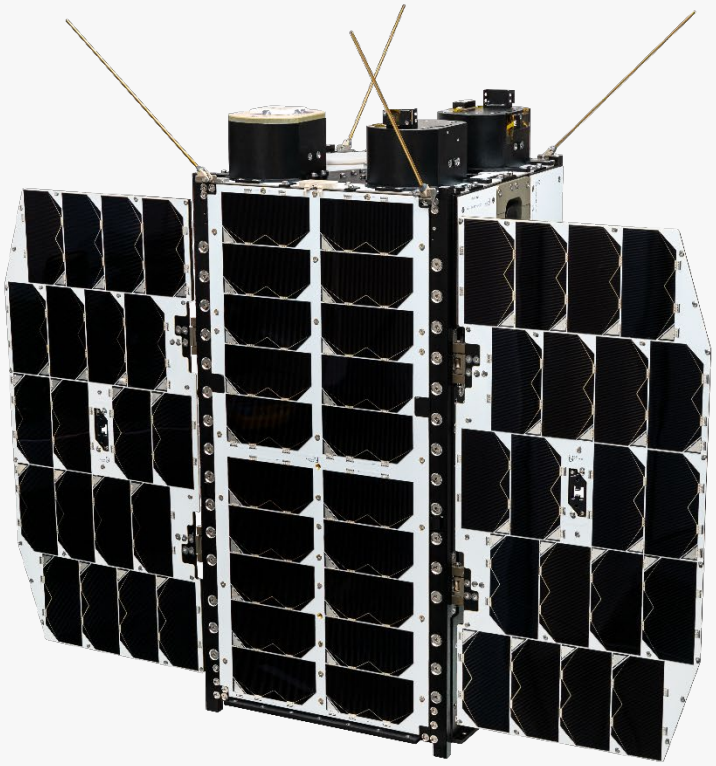

# Platform-Payload Interface Control Document

M16P Standard Nanosatellite

Date: 20/08/2024

Company: Kongsberg NanoAvionics

Address: Mokslininkų str. 2A, LT-08412, Vilnius Lithuania

Mobile: +370 663 77717

E-mail: info@nanoavionics.com

# Contents


1 Introduction & Scope of Document ..... 4

2 Mechanical Interfaces ..... 4

2.1 Payload Mounting ..... 4

2.2 Launch Interface ..... 7

3 Electrical Data Interface ..... 8

4 Electrical Interface ..... 10

4.1 Power Interface Specifications ..... 11

5 Thermal Interface ..... 11


# Figures


Figure 1. Payload Interface with the Bus in M16P Light Configuration (With Propulsion System) ..... 4
Figure 2. Payload Interface with the Bus in M16P Light Configuration (Without Propulsion System) ..... 5
Figure 3. Payload Interface with the Bus in M16P Mid Configuration (With Propulsion System) ..... 5
Figure 4. Payload Interface with the Bus in M16P Mid Configuration (Without Propulsion System) ..... 6
Figure 5. Payload Interface with the Bus in M16P Max Configuration (With Propulsion System) ..... 6
Figure 6. Payload Interface with the Bus in M16P Max Configuration (Without Propulsion System) ..... 7
Figure 7 High Level Architecture of Data Interfaces within M16P Standard Platform ..... 9
Figure 8. Radiator Area for Payload (Highlighted in Blue) ..... 12


# Tables


Table 1. Minimum frequency requirements ..... 7
Table 2. Light, Mid, and Max Specification Satellite-Payload Interface ..... 8
Table 3. EPS outputs available for payload ..... 10
Table 4. VBAT high power (OUT10) channel specification ..... 11
Table 5. VBAT high power (OUT10) channel specification ..... 11
Table 6. 3.3V-12V power channel specification ..... 11
Table 7. 12V-28V power channel specification ..... 11

# Abbreviations and Definitions

| Abbreviation | Description |
|---|---|
| ADCS | Attitude Determination and Control System |
| EM | Engineering Model |
| FM | Flight Model |
| ICD | Interface Control Document |
| EMI | Electromagnetic Interference |
| LEOP | Launch and Early Orbit Phase |
| MCS | Mission Control Software |
| EPS | Electrical Power System |
| FC | Flight Computer |
| PC | Payload Controller |
| ST | Star Tracker |
| MTQ | Magnetorquer |
| RW | Reaction Wheel |
| UHF | Ultra-High Frequency |
| BOL | Beginning-of-life |
| EOL | End-of-life |
| BP | Battery Pack |
| RBF | Remove Before Flight |
| KS | Kill Switch |
| MPPT | Maximum Power Point Tracking |
| RTC | Real-Time Clock |
| MCU | Microcontroller Unit |
| COMM | UHF Radio Subsystem |
| IOD | In-orbit Demonstration |
| GMC | Gimbal Control Unit |
| GPIO | General-Purpose Input/Output |
| EEE | Electrical, Electronic, Electromechanical |
| TID | Total Ionizing Dose |
| TRL | Technology Readiness Level |

# 1 Introduction & Scope of Document

This document has been prepared with the objective of describing payload interfaces of standard M16P platform. Mechanical, electrical data/power, and thermal interfaces are discussed in this document.

M16P platform is a 16U nanosatellite form factor spacecraft developed by NanoAvionics. Light, Mid and Maxi configurations are offered for M16P platform baseline, thus payload interfaces available might vary depending on the configuration chosen.

Main differences in configurations are in Payload Controller capabilities, AOCS configuration and high-speed X-band data downlink. Light configuration includes Payload Controller PC 1.5, coarse AOCS determination, and no X-band transmitter. Mid configuration includes Payload Controller PC 2.3, coarse AOCS determination, and X-band transmitter. Max configuration includes Payload Controller PC 2.3, precise AOCS determination, and X-band transmitter. Propulsion is optional in all configurations.

# 2 Mechanical Interfaces

## 2.1 Payload Mounting

The M16P standard satellite is designed to accommodate various size payloads, according to the overall spacecraft configuration. The payload can be mounted in various orientations, if it is within the provided envelope. The payload size and placement in the platform can be observed from Figure 1 to Figure 6, highlighted in blue.

By default, PC104 hole pattern with M3 interfaces is used for payload mounting, however different kinds of mounting can also be employed.

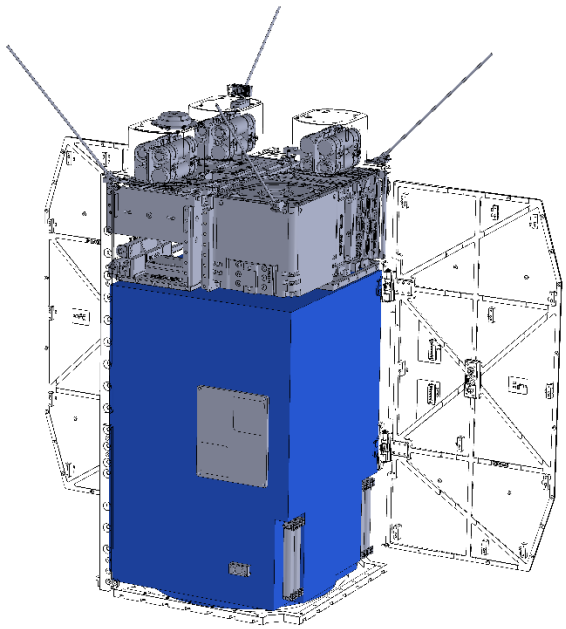

Figure 1. Payload Interface with the Bus in M16P Light Configuration (With Propulsion System)

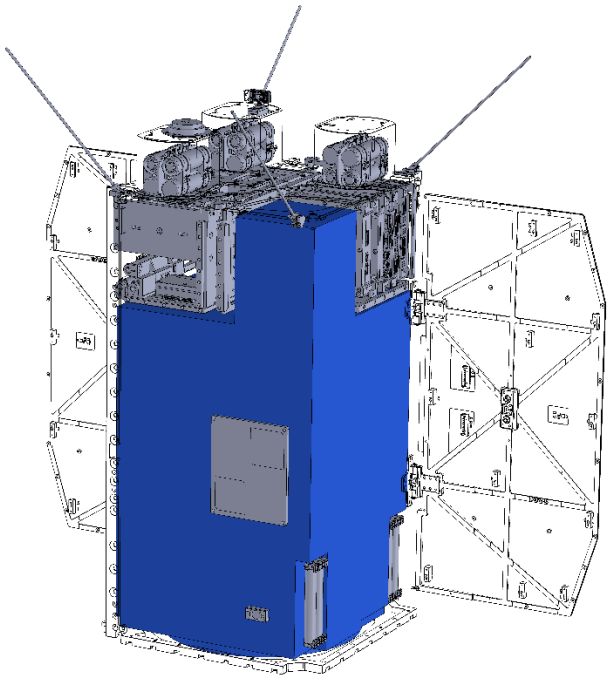

Figure 2. Payload Interface with the Bus in M16P Light Configuration (Without Propulsion System)

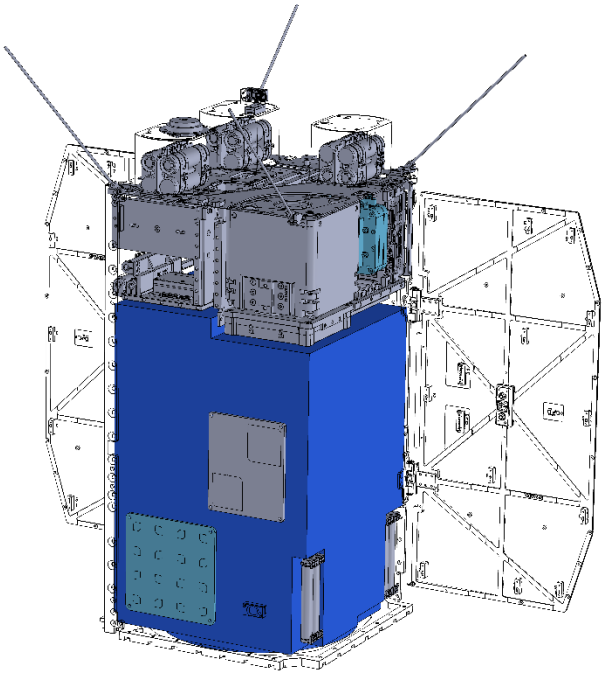

Figure 3. Payload Interface with the Bus in M16P Mid Configuration (With Propulsion System)

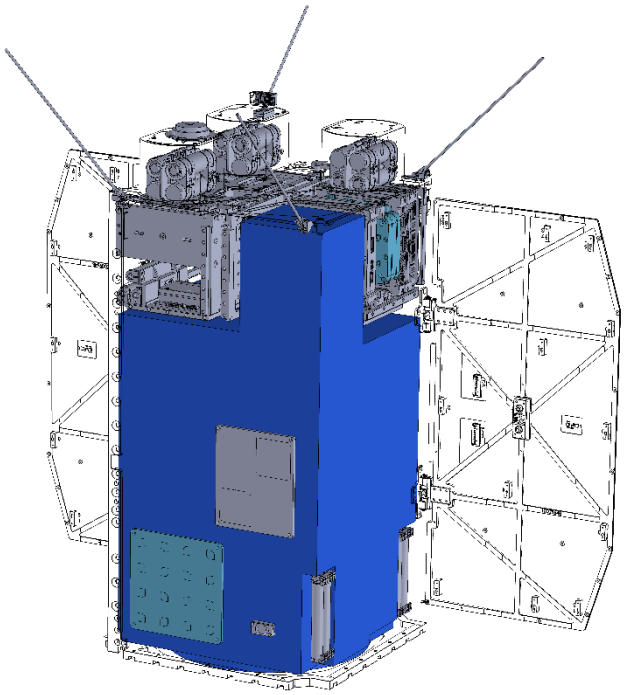

Figure 4. Payload Interface with the Bus in M16P Mid Configuration (Without Propulsion System)

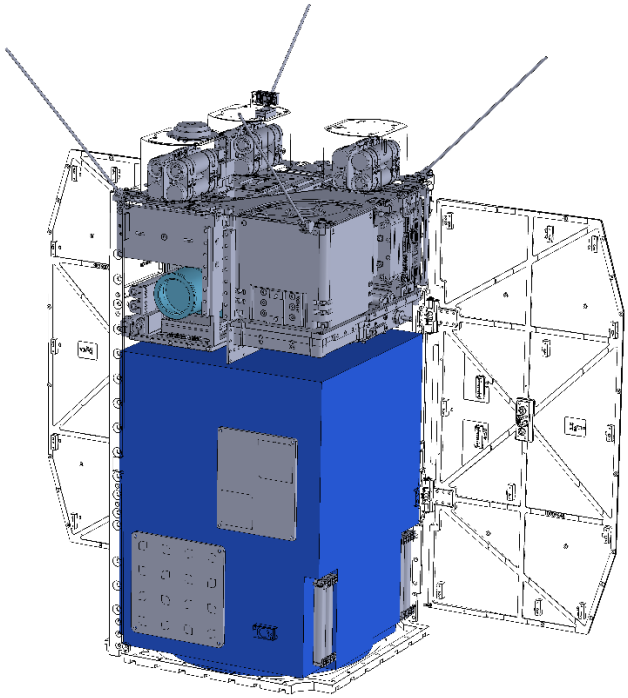

Figure 5. Payload Interface with the Bus in M16P Max Configuration (With Propulsion System)

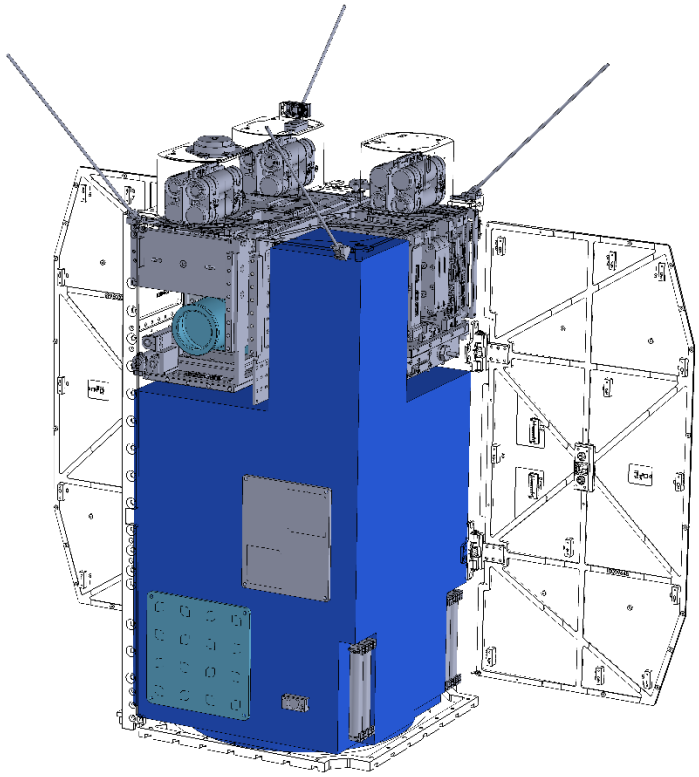

Figure 6. Payload Interface with the Bus in M16P Max Configuration (Without Propulsion System)

## 2.2 Launch Interface

M16P satellite is compliant with the standard nanosatellite dimensions, so also with standard deployers, like Exolaunch Exopod/Exopod Nova or Astrofein.

The minimum payload natural frequency shall be 40 Hz to meet the requirements of Falcon 9 launch vehicle. To meet the requirement of all launch vehicles in NanoAvionics portfolio payload natural frequency shall be higher than 150 Hz.

Table 1. Minimum frequency requirements

| Launcher | Longitudinal | Lateral |
|---|---|---|
| Spectrum | 150 Hz | 150 Hz |
| Falcon 9 | 40 Hz | 40 Hz |
| Vega-C | 115 Hz | 115 Hz |
| PSLV | 135 Hz | 70 Hz |
| Electron | - | - |
| | | |
| Worst Case | 150 Hz | 150 Hz |

# 3 Electrical Data Interface

The payload establishes a direct connection to payload controller (PC1.5 or PC2) via various communication protocols such as CAN, RS422/UART, SPI, I2C, LVDS, GTP, and GPIO, depending on the satellite specifications. A max and medium-specification satellite accommodates a PC2, and a light specification satellite accommodates a PC1.5. Both payload controllers differ in their data interface capability. Available data interfaces are given in the table below.

Table 2. Light, Mid, and Max Specification Satellite-Payload Interface.

| Light Spec – PC1.5 | Mid/Max Spec – PC2 |
|---|---|
| 1 x 100BASE-TX Ethernet[1] | 3x IEE 802.3 1000BASE-T |
| 1 x CAN | 1 x CAN |
| 1 x RS-422 (on request RS-485) | 3 x RS422/UART[2] |
| 3 x SPI | 1 x SPI |
| 2 x USART/UART | 2 x I2C |
| 2 x I2C | Up to 20 x LVDS, up to 40 x GPIO[3] |
| GPIO[4] | |

[1] Ethernet switch is available as an optional item. It allows to increase the number of Ethernet outputs from 1 to 4.

[2] Might be reduced to two depending on X-band solution used

[3] Depends on case by case basis

[4] Depends on case by case basis

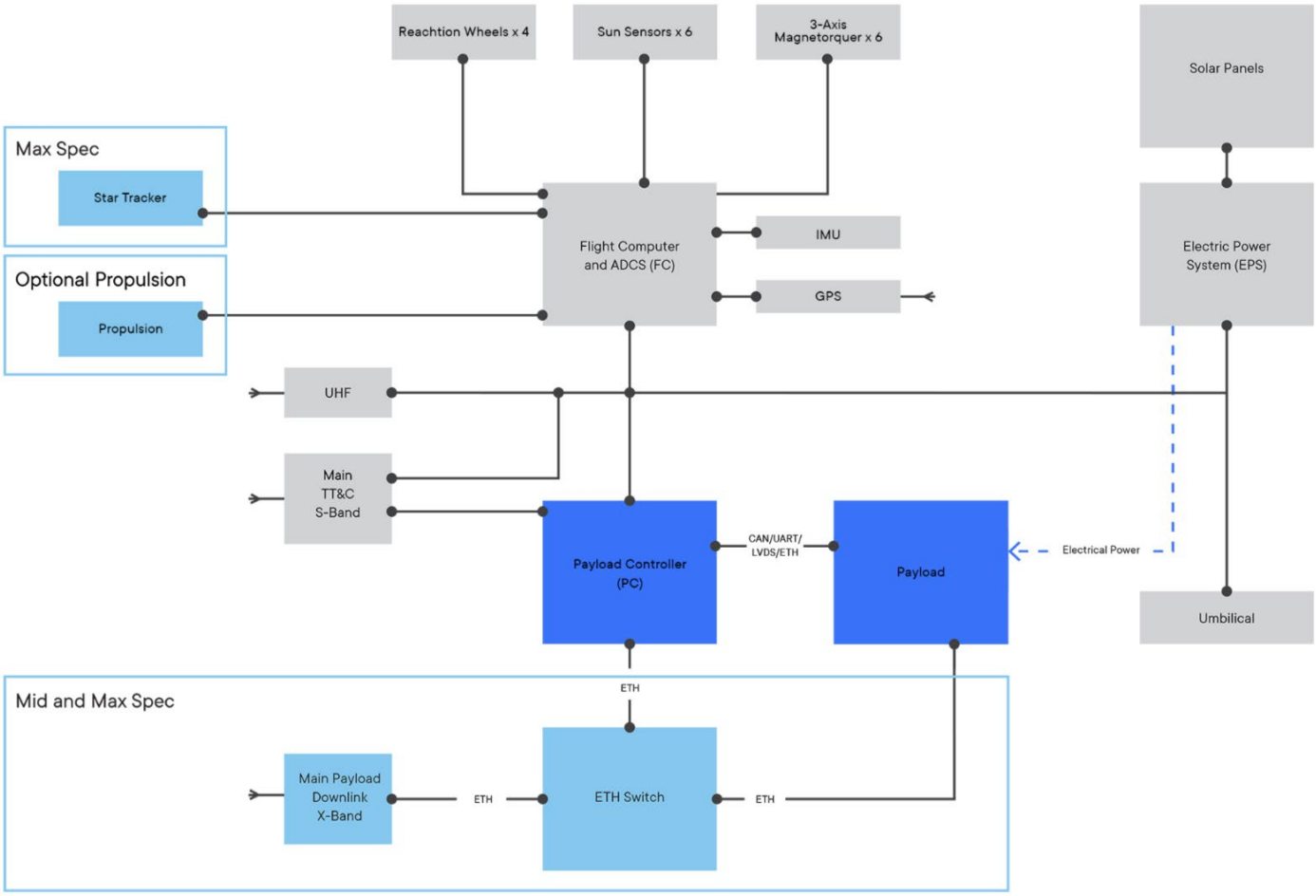


Figure 7 High Level Architecture of Data Interfaces within M16P Standard Platform

# 4 Electrical Interface

Power supply to the payload is facilitated by the EPS. The availability of power channels for the payload depends on the specific configuration of the platform. Table 3 outlines the power output channels allocated for the payload, with availability depending on satellite specifications. The EPS provides up to 2 controllable output channels dedicated to the payload, accessible via Molex Pico-Lock connectors. An additional 8 output channels can be added using the EPS output channel expander (OCE). High voltage is also accessible through the high voltage expander board (HVE), providing 12-28V for payload use. However, it's important to note that EPS OUT10 is reserved for powering HVE OUT2.

Output channel OUT 6 is available only at fixed voltages: 5.0V for Max Specification (MS) and Mid Specification (MS), or 3.3V for Light Specification (LS). Additionally, 4 DC/DC converters can be configured to voltages ranging from 3.3V to 12V and linked to OCE Output channels OUT12, OUT13, OUT14, OUT15, OUT16, OUT17, and OUT18. These channels can also be connected to VBAT. Channels OUT10 and OUT11 are connected to the battery and are not configurable. All output channels have configurable overcurrent protection. OUT10 serves as a high-power output capable of delivering up to 10A of current. HVE OUT2 can be configured to voltages ranging from 12V to 28V.

Table 3. EPS outputs available for payload

| Subsystem | Output channel | Voltage Range (V) | Max power (W) | Comments |
|---|---|---|---|---|
| EPS | OUT 6 | 5 | 15 | Fixed 5V output. Available only in LS. |
| EPS | OUT 10 | 7.0-8.3 | 70 | High power VBAT output. Up to 10A and 70W. |
| EPS OCE | OUT 11 | 7.0-8.3 | 15 | Available only in LS. Low power VBAT output. |
| EPS OCE | OUT 12 | 3.3-12 | 15 | 3.3V- 12V or VBAT available to configure. |
| EPS OCE | OUT 13 | 3.3-12 | 15 | 3.3V- 12V or VBAT available to configure. |
| EPS OCE | OUT 14 | 3.3-12 | 15 | 3.3V- 12V or VBAT available to configure. |
| EPS OCE | OUT 15 | 3.3-12 | 15 | 3.3V- 12V or VBAT available to configure. |
| EPS OCE | OUT 16 | 3.3-12 | 15 | 3.3V- 12V or VBAT available to configure. |
| EPS OCE | OUT 17 | 3.3-12 | 15 | 3.3V- 12V or VBAT available to configure. |
| EPS OCE | OUT 18 | 3.3-12 | 15 | 3.3V- 12V or VBAT available to configure. |
| EPS HVE | OUT 2 | 12-28 | 70 | Up to 5A and 70W.<br>If HVE OUT2 is in use, EPS OUT 10 cannot be utilized as it powers HVE OUT2. |

## 4.1 Power Interface Specifications

The satellite bus is outfitted with a robust electrical system designed to supply the necessary voltages required for the smooth operation of the payload subsystems. These voltages encompass a range of essential power requirements, including 3.3V - 12V, 12V-28V, and VBAT. Each of these voltages serves distinct purpose within the satellite's payload ecosystem, catering to the diverse needs of various onboard modules and instruments.

Table 4. VBAT high power (OUT10) channel specification

| Parameter | Value | Comment |
|---|---|---|
| Output Voltage range | 7.0 – 8.3 V (no load) | |
| Over Current protection (hardware) | 0 - 10 A | EPS OUT 10 CH max 10A. |
| Over Current protection (software) | 0 – 10 A | SW OVC protection is optional. |

Table 5. VBAT high power (OUT10) channel specification

| Parameter | Value | Comment |
|---|---|---|
| Output Voltage range | 7.0 – 8.3 V (no load) | |
| Over Current protection (hardware) | 0 - 3.13 A | |
| Over Current protection (software) | 0 – 3.13 A | SW OVC protection is optional. |

Table 6. 3.3V-12V power channel specification

| Parameter | Value | Comment |
|---|---|---|
| Output Voltages | 3.3V- 12V (no load) | |
| Max Voltage ripple | 45 mVpp (@ $I_L$ =0A, $V_{out}$ = 12 V)<br>36 mVpp (@ $I_L$ =0.83A, $V_{out}$ = 12 V)<br>71 mVpp (@ $I_L$ =1.66A, $V_{out}$ = 12 V) | |
| Over Current protection (hardware) | 0 - 3.13 A | |
| Over Current protection (software) | 0 – 3.13 A | SW OVC protection is optional. |

Table 7. 12V-28V power channel specification

| Parameter | Value | Comment |
|---|---|---|
| Output Voltage range | 12 – 28 V (no load) | |
| Max Voltage ripple | 100 mVpp (@ I =3.6A) | |
| Over Current protection (hardware) | 0 – 5.0 A | HW OVC protection is implemented on EPS1 OUT10. |
| Over Current protection (software) | 0 – 5.0 A | HW OVC protection is implemented on EPS1 OUT10.<br>SW OVC protection is optional. |

# 5 Thermal Interface

Thermal control involves the use of mechanisms and materials to regulate and manage the spacecraft temperature in the space environment. Baseline design involves passive thermal control options:

1. Thermal insulation materials.
2. Radiative surfaces.
3. Heat Straps (shall be attached to payload thermal points).
4. Heat Sink (possible to install into payload envelope).

The payload radiator, depicted in Figure 8, serves to regulate temperatures for the satellite's payload components. Its flexible mounting system accommodates various payload configurations, with a size of up to 6 units[5]. This ensures efficient heat dissipation and structural stability, vital for mission performance.

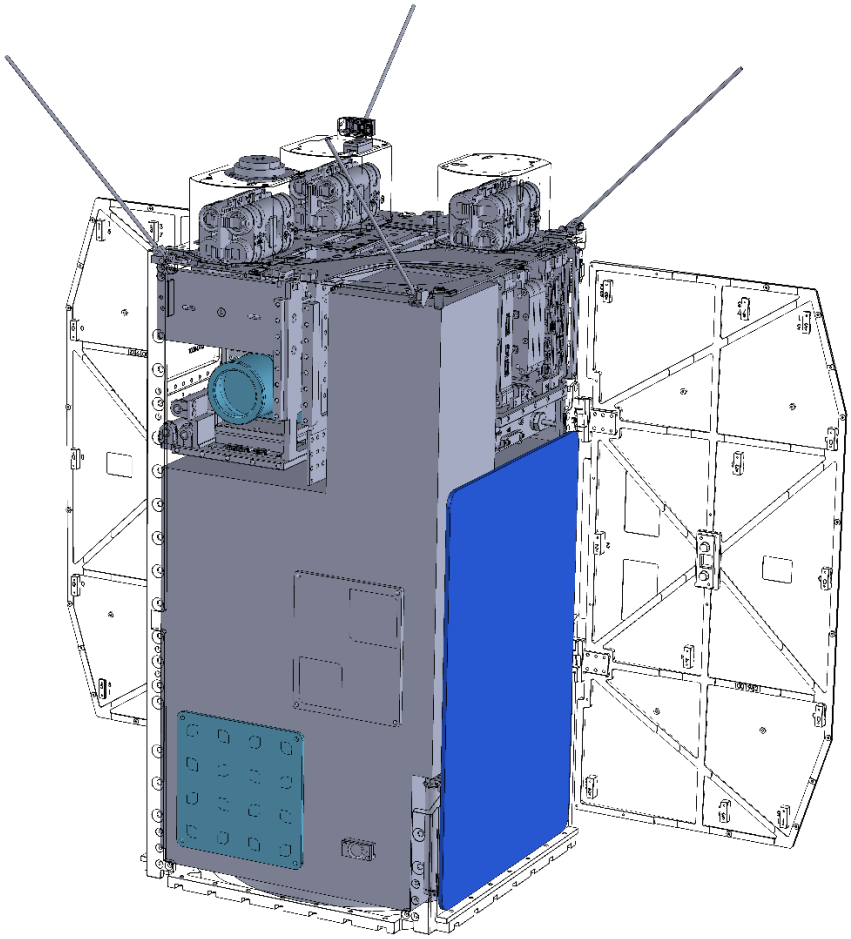

Figure 8. Radiator Area for Payload (Highlighted in Blue)

[5] Depending on case-by-case basis there could be a possibility to attach another (or reposition a current) up to 6U radiator to the wall which is parallel to the one with an already shown radiator in Figure 8.