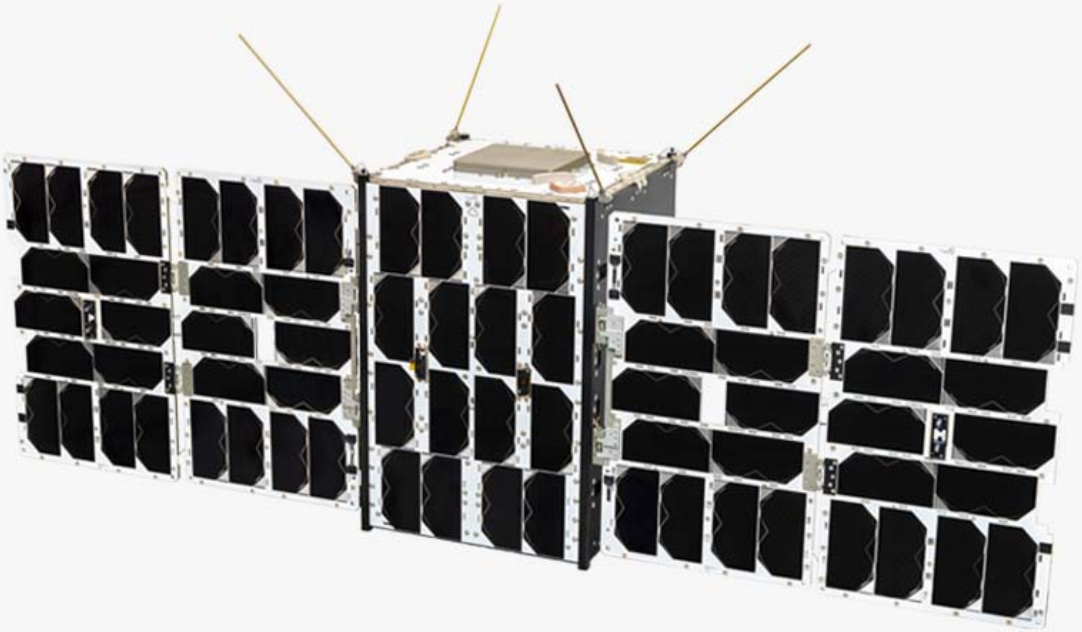

Platform-Payload Interface Control Document

M12P Standard Nanosatellite

Date: 20/08/2024

Company: Kongsberg NanoAvionics

Address: Mokslininkų str. 2A, LT-08412, Vilnius Lithuania

Mobile: +370 663 77717

E-mail: info@nanoavionics.com

Contents

1 Introduction & Scope of Document 4

2 Mechanical Interfaces 4

2.1 Payload Mounting 4

2.2 Launch Interface 7

3 Electrical Data Interface 8

4 Electrical Power Interface 10

4.1 Power Interface Specifications 11

5 Thermal Interface 11

Figures

Figure 1. Payload Interface with the Bus in M12P Light Configuration (With Propulsion System) 4
Figure 2. Payload Interface with the Bus in M12P Light Configuration (Without Propulsion System) 5
Figure 3. Payload Interface with the Bus in M12P Mid Configuration (With Propulsion System) 5
Figure 4. Payload Interface with the Bus in M12P Mid Configuration (Without Propulsion System) 6
Figure 5. Payload Interface with the Bus in M12P Max Configuration (With Propulsion System) 6
Figure 6. Payload Interface with the Bus in M12P Max Configuration (Without Propulsion System) 7
Figure 7 High Level Architecture of Data Interfaces within M12P Standard Platform 9
Figure 8. Radiator Area for Payload (Highlighted in Blue) 12

Tables

Table 1. Minimum frequency requirements 7
Table 2. Light, Mid, and Max Specification Satellite-Payload Interface 8
Table 3. EPS outputs available for payload 10
Table 4. VBAT high power (OUT10) channel specification 11
Table 5. VBAT high power (OUT10) channel specification 11
Table 6. 3.3V-12V power channel specification 11
Table 7. 12V-28V power channel specification 11

Abbreviations and Definitions

Abbreviation	Description
ADCS	Attitude Determination and Control System
EM	Engineering Model
FM	Flight Model
ICD	Interface Control Document
EMI	Electromagnetic Interference
LEOP	Launch and Early Orbit Phase
MCS	Mission Control Software
EPS	Electrical Power System
FC	Flight Computer
PC	Payload Controller
ST	Star Tracker
MTQ	Magnetorquer
RW	Reaction Wheel
UHF	Ultra-High Frequency
BOL	Beginning-of-life
EOL	End-of-life
BP	Battery Pack
RBF	Remove Before Flight
KS	Kill Switch
MPPT	Maximum Power Point Tracking
RTC	Real-Time Clock
MCU	Microcontroller Unit
COMM	UHF Radio Subsystem
IOD	In-orbit Demonstration
GMC	Gimbal Control Unit
GPIO	General-Purpose Input/Output
EEE	Electrical, Electronic, Electromechanical
TID	Total Ionizing Dose
TRL	Technology Readiness Level

1 Introduction & Scope of Document

This document has been prepared with the objective of describing payload interfaces of standard M12P platform. Mechanical, electrical data/power, and thermal interfaces are discussed in this document.

M12P platform is a 12U nanosatellite form factor spacecraft developed by NanoAvionics. Light, Mid and Max configurations are offered for M12P platform baseline, thus payload interfaces available might vary depending on the configuration chosen.

Main differences in configurations are in Payload Controller capabilities, AOCS configuration and high-speed X-band data downlink. Light configuration includes Payload Controller PC 1.5, coarse AOCS determination, and no X-band transmitter. Mid configuration includes Payload Controller PC 2.3, coarse AOCS determination, and X-band transmitter. Maximum configuration includes Payload Controller PC 2.3, precise AOCS determination, and X-band transmitter. Propulsion is optional in all configurations.

2 Mechanical Interfaces

2.1 Payload Mounting

The M12P standard satellite is designed to accommodate various size payloads, according to the overall spacecraft configuration. The payload can be mounted in various orientations, if it is within the provided envelope. The payload size and placement in the platform can be observed from Figure 1 to Figure 6, highlighted in blue.

By default, PC104 hole pattern with M3 interfaces is used for payload mounting, however different kinds of mounting can also be employed.

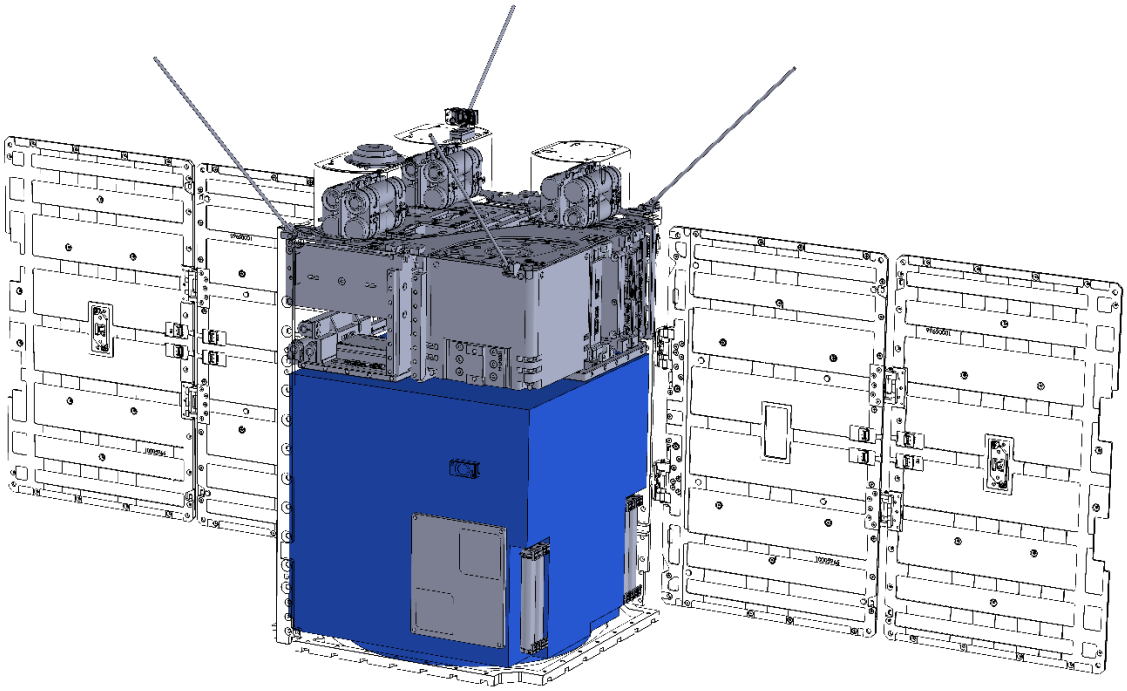

Figure 1. Payload Interface with the Bus in M12P Light Configuration (With Propulsion System)

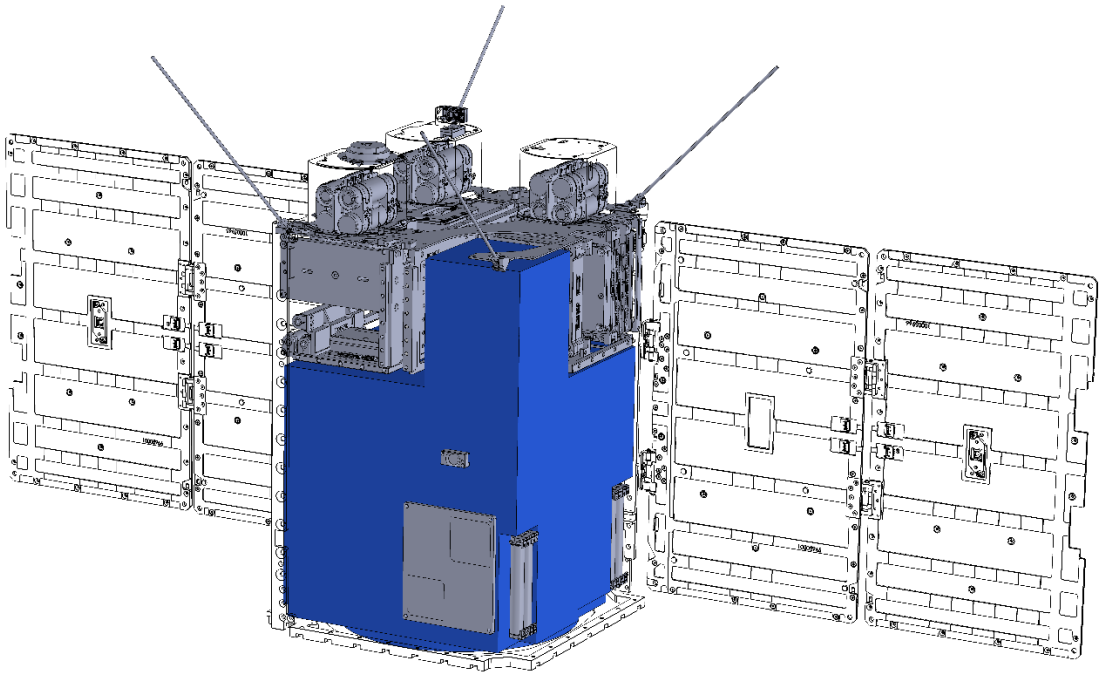

Figure 2. Payload Interface with the Bus in M12P Light Configuration (Without Propulsion System)

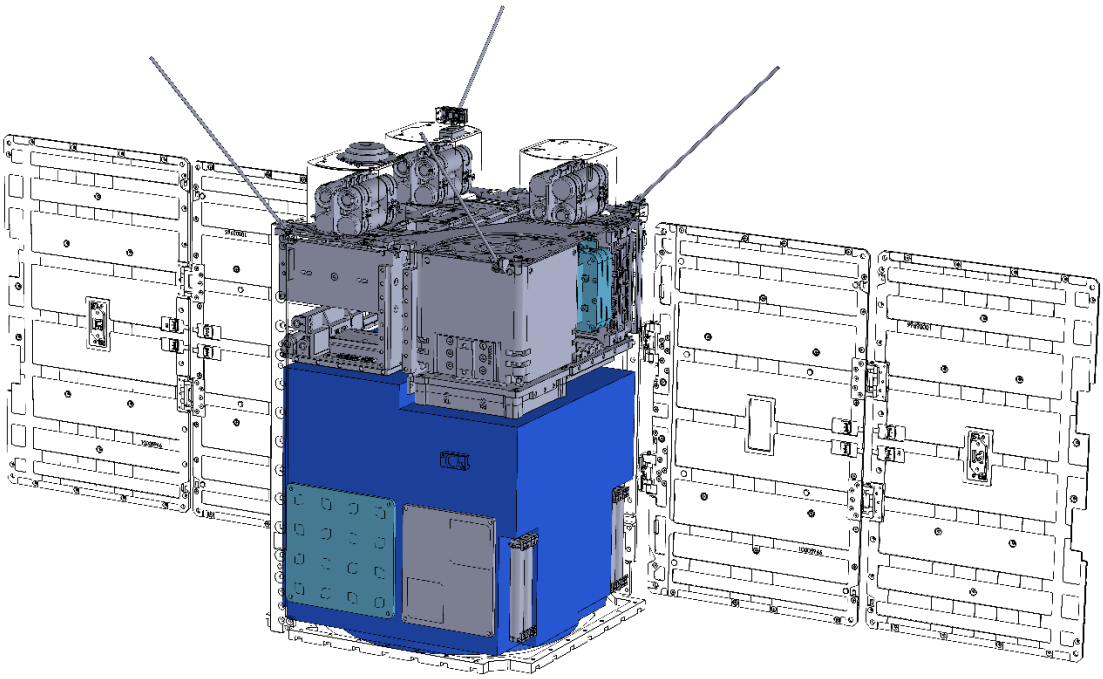

Figure 3. Payload Interface with the Bus in M12P Mid Configuration (With Propulsion System)

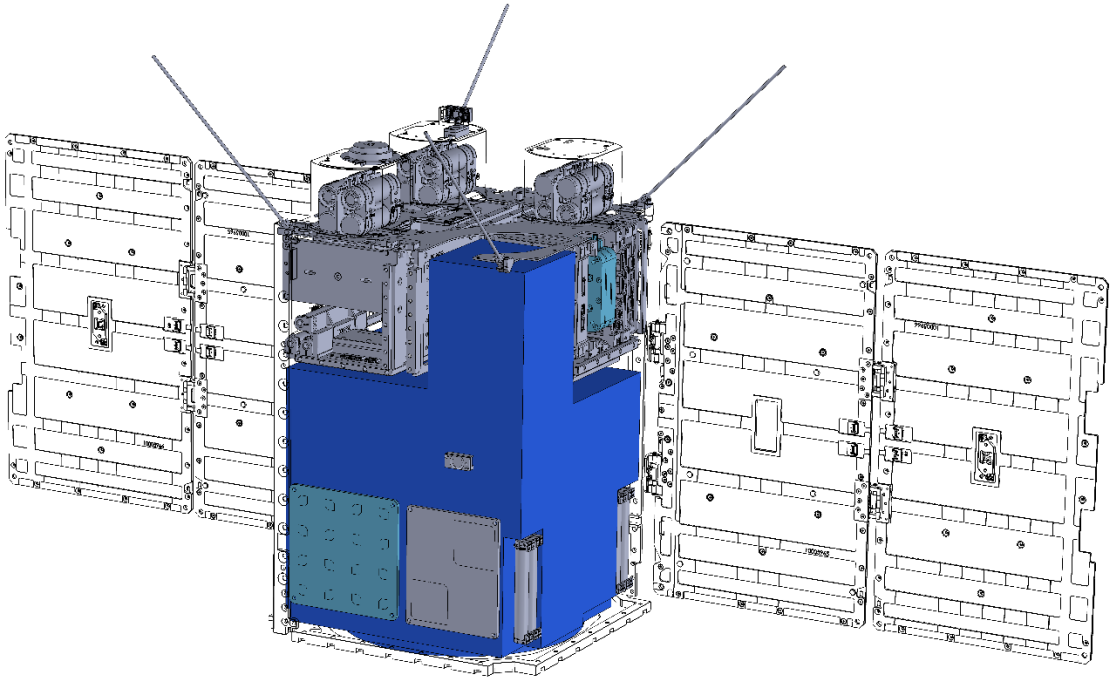

Figure 4. Payload Interface with the Bus in M12P Mid Configuration (Without Propulsion System)

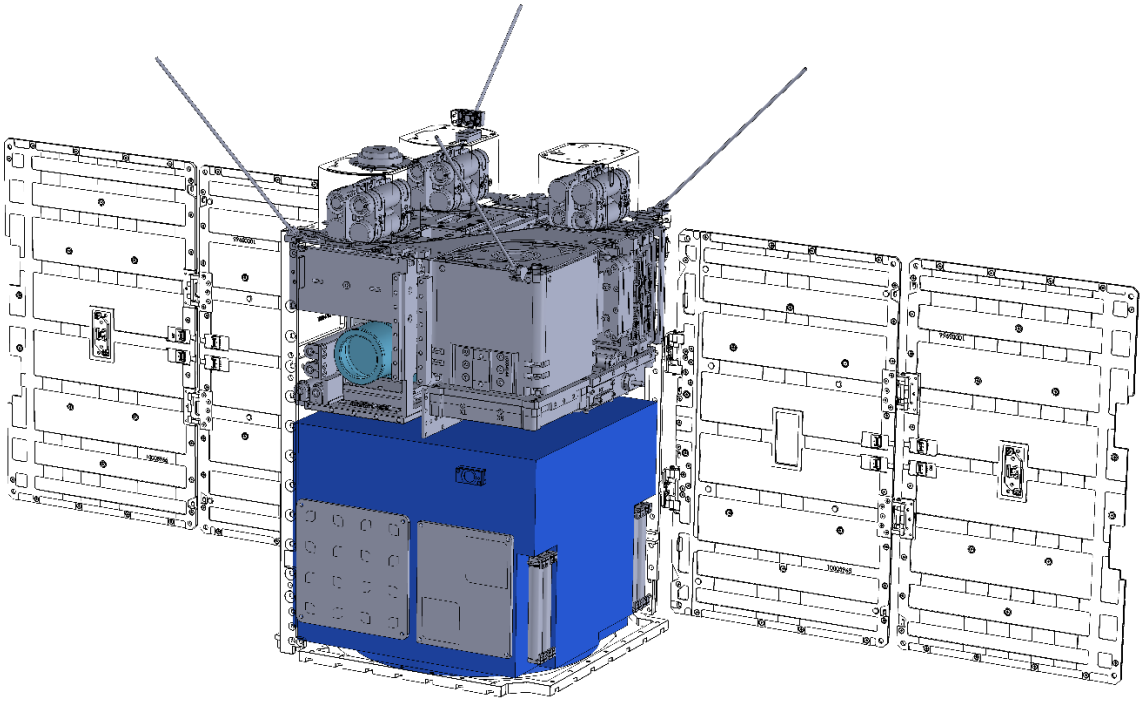

Figure 5. Payload Interface with the Bus in M12P Max Configuration (With Propulsion System)

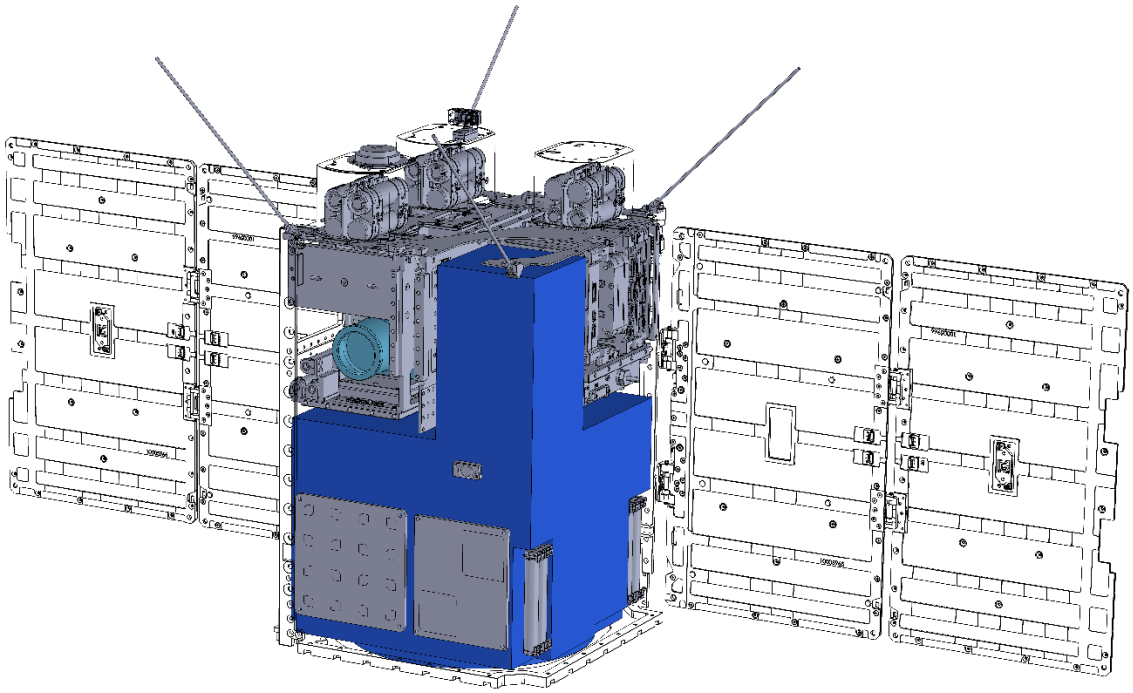

Figure 6. Payload Interface with the Bus in M12P Max Configuration (Without Propulsion System)

2.2 Launch Interface

M12P satellite is compliant with the standard nanosatellite dimensions, so also with standard deployers, like Exolaunch Exopod/Exopod Nova or Astrofein.

The minimum payload natural frequency shall be 40 Hz to meet the requirements of Falcon 9 launch vehicle. To meet the requirement of all launch vehicles in NanoAvionics portfolio payload natural frequency shall be higher than 150 Hz.

Table 1. Minimum frequency requirements

Launcher	Longitudinal	Lateral
Spectrum	150 Hz	150 Hz
Falcon 9	40 Hz	40 Hz
Vega-C	115 Hz	115 Hz
PSLV	135 Hz	70 Hz
Electron	-	-
Worst Case	150 Hz	150 Hz

3 Electrical Data Interface

The payload establishes a direct connection to payload controller (PC1.5 or PC2) via various communication protocols such as CAN, RS422/UART, SPI, I2C, LVDS, GTP, and GPIO, depending on the satellite specifications. A max and mid-specification satellite accommodates a PC2, and a light specification satellite accommodates a PC1.5. Both payload controllers differ in their data interface capability. Available data interfaces are given in the table below.

Table 2. Light, Mid, and Max Specification Satellite-Payload Interface.

Light Spec – PC1.5	Mid/Max Spec – PC2
1 x 100BASE-TX Ethernet[1]	3x IEE 802.3 1000BASE-T
1 x CAN	1 x CAN
1 x RS-422 (on request RS-485)	3 x RS422/UART[2]
3 x SPI	1 x SPI
2 x USART/UART	2 x I2C
2 x I2C	Up to 20 x LVDS, up to 40 x GPIO[3]
GPIO[4]	

[1] Ethernet switch is available as an optional item. It allows to increase the number of Ethernet outputs from 1 to 4.

[2] Might be reduced to two depending on X-band solution used

[3] Depends on case by case basis

[4] Depends on case by case basis

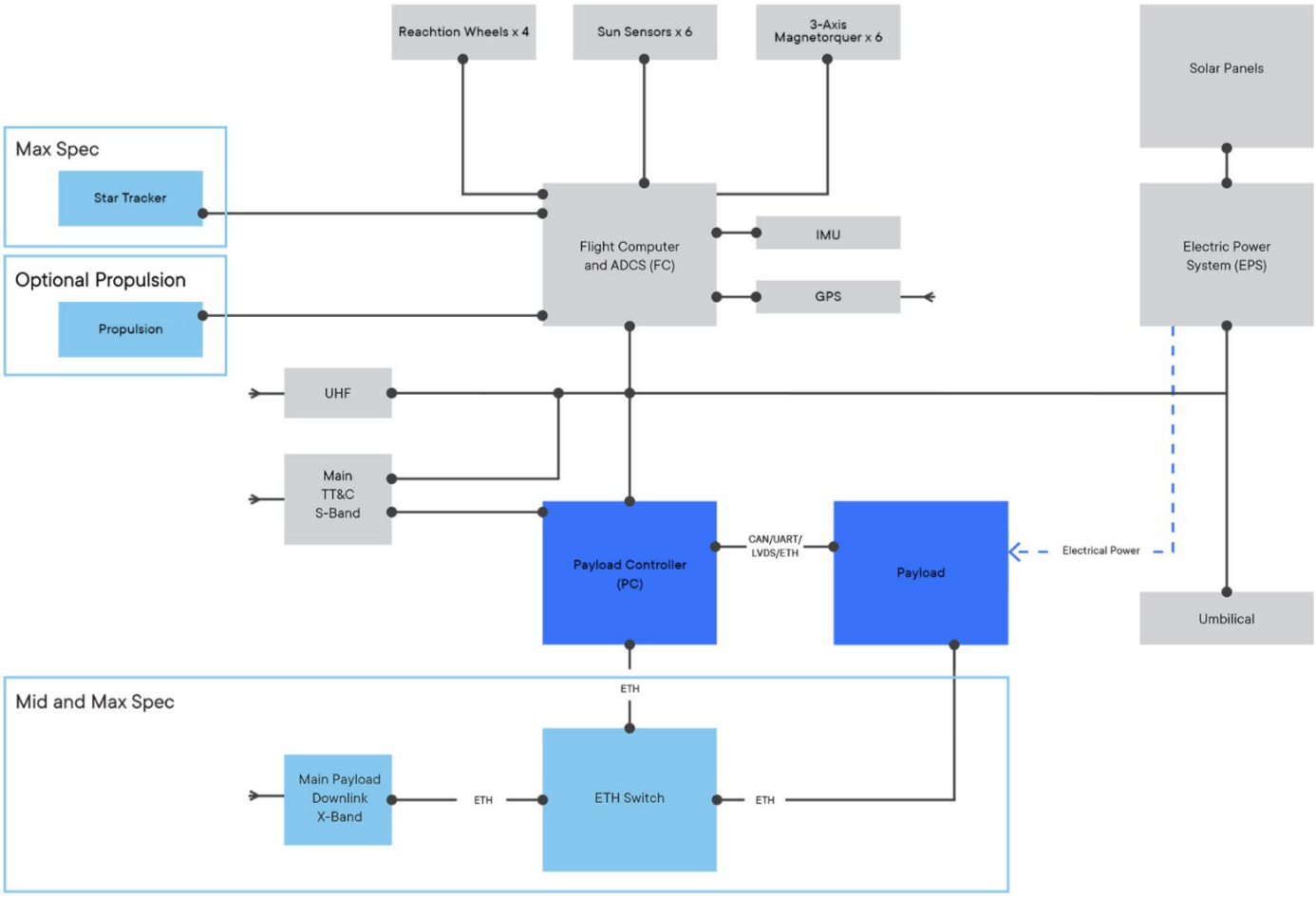

Figure 7 High Level Architecture of Data Interfaces within M12P Standard Platform

4 Electrical Power Interface

Power supply to the payload is facilitated by the EPS. The availability of power channels for the payload depends on the specific configuration of the platform. Output channel OUT 6 is available only at fixed voltages: 5.0V for Max Specification (MS) and Mid Specification (MS), or 3.3V for Light Specification (LS). Additionally, 4 DC/DC converters can be configured to voltages ranging from 3.3V to 12V and linked to OCE Output channels OUT12, OUT13, OUT14, OUT15, OUT16, OUT17, and OUT18. These channels can also be connected to VBAT. Channels OUT10 and OUT11 are connected to the battery and are not configurable. All output channels have configurable overcurrent protection. OUT10 serves as a high-power output capable of delivering up to 10A of current. HVE OUT2 can be configured to voltages ranging from 12V to 28V.

Table 3 outlines the power output channels allocated for the payload, with availability depending on satellite specifications. The EPS provides up to 2 controllable output channels dedicated to the payload, accessible via Molex Pico-Lock connectors. An additional 8 output channels can be added using the EPS output channel expander (OCE). High voltage is also accessible through the high voltage expander board (HVE), providing 12-28V for payload use. However, it's important to note that EPS OUT10 is reserved for powering HVE OUT2.

Output channel OUT 6 is available only at fixed voltages: 5.0V for Max Specification (MS) and Mid Specification (MS), or 3.3V for Low Specification (LS). Additionally, 4 DC/DC converters can be configured to voltages ranging from 3.3V to 12V and linked to OCE Output channels OUT12, OUT13, OUT14, OUT15, OUT16, OUT17, and OUT18. These channels can also be connected to VBAT. Channels OUT10 and OUT11 are connected to the battery and are not configurable. All output channels have configurable overcurrent protection. OUT10 serves as a high-power output capable of delivering up to 10A of current. HVE OUT2 can be configured to voltages ranging from 12V to 28V.

Table 3. EPS outputs available for payload

Subsystem	Output channel	Voltage Range (V)	Max power (W)	Comments
EPS	OUT 6	5	15	Fixed 5V output. Available only in LS
EPS	OUT 10	7.0-8.3	70	High power VBAT output. Up to 10A and 70W.
EPS OCE	OUT 11	7.0-8.3	15	Available only in LS. Low power VBAT output.
EPS OCE	OUT 12	3.3-12	15	3.3V- 12V or VBAT available to configure
EPS OCE	OUT 13	3.3-12	15	3.3V- 12V or VBAT available to configure
EPS OCE	OUT 14	3.3-12	15	3.3V- 12V or VBAT available to configure
EPS OCE	OUT 15	3.3-12	15	3.3V- 12V or VBAT available to configure
EPS OCE	OUT 16	3.3-12	15	3.3V- 12V or VBAT available to configure
EPS OCE	OUT 17	3.3-12	15	3.3V- 12V or VBAT available to configure
EPS OCE	OUT 18	3.3-12	15	3.3V- 12V or VBAT available to configure

EPS HVE	OUT 2	12-28	70	Up to 5A and 70W. If HVE OUT2 is in use, EPS OUT 10 cannot be utilized as it powers HVE OUT2.

4.1 Power Interface Specifications

The satellite bus is outfitted with a robust electrical system designed to supply the necessary voltages required for the smooth operation of the payload subsystems. These voltages encompass a range of essential power requirements, including 3.3V - 12V, 12V-28V, and VBAT. Each of these voltages serves distinct purpose within the satellite's payload ecosystem, catering to the diverse needs of various onboard modules and instruments.

Table 4. VBAT high power (OUT10) channel specification

Parameter	Value	Comment
Output Voltage range	7.0 – 8.3 V (no load)	
Over Current protection (hardware)	0 - 10 A	EPS OUT 10 CH max 10A
Over Current protection (software)	0 – 10 A	SW OVC protection is optional.

Table 5. VBAT high power (OUT10) channel specification

Parameter	Value	Comment
Output Voltage range	7.0 – 8.3 V (no load)	
Over Current protection (hardware)	0 - 3.13 A	
Over Current protection (software)	0 – 3.13 A	SW OVC protection is optional.

Table 6. 3.3V-12V power channel specification

Parameter	Value	Comment
Output Voltages	3.3V- 12V (no load)	
Max Voltage ripple	45 mVpp (@ I_L =0A, V_{out} = 12 V) 36 mVpp (@ I_L =0.83A, V_{out} = 12 V) 71 mVpp (@ I_L =1.66A, V_{out} = 12 V)	
Over Current protection (hardware)	0 - 3.13 A	
Over Current protection (software)	0 – 3.13 A	SW OVC protection is optional.

Table 7. 12V-28V power channel specification

Parameter	Value	Comment
Output Voltage range	12 – 28 V (no load)	
Max Voltage ripple	100 mVpp (@ I =3.6A)	
Over Current protection (hardware)	0 – 5.0 A	HW OVC protection is implemented on EPS1 OUT10.
Over Current protection (software)	0 – 5.0 A	HW OVC protection is implemented on EPS1 OUT10. SW OVC protection is optional.

5 Thermal Interface

Thermal control involves the use of mechanisms and materials to regulate and manage the spacecraft temperature in the space environment. Baseline design involves passive thermal control options:

1. Thermal insulation materials.
2. Radiative surfaces.
3. Heat Straps (shall be attached to payload thermal points).
4. Heat Sink (possible to install into payload envelope).

The payload radiator, depicted in Figure 8, serves to regulate temperatures for the satellite's payload components. Its flexible mounting system accommodates various payload configurations, with a size of up to 4 units[5]. This ensures efficient heat dissipation and structural stability, vital for mission performance.

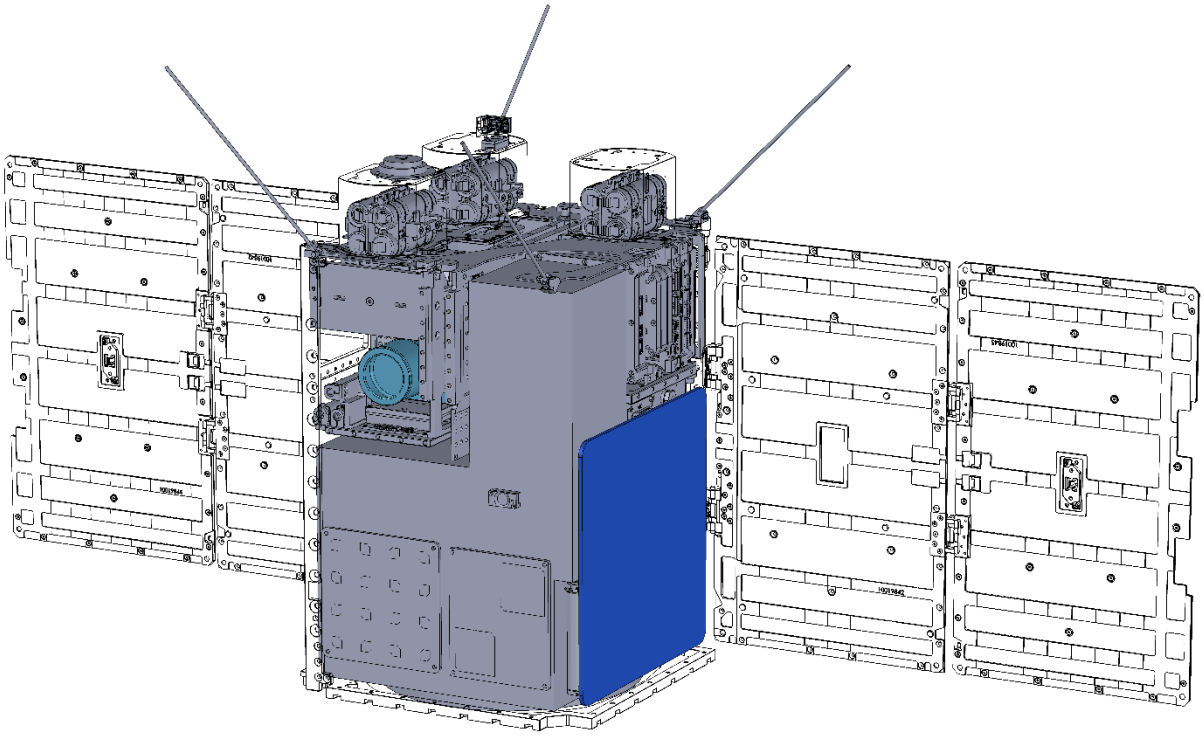

Figure 8. Radiator Area for Payload (Highlighted in Blue)

[5] Depending on case-by-case basis there could be a possibility to attach another (or reposition a current) up to 4U radiator to the wall which is parallel to the one with an already shown radiator in Figure 8.