OXFORD INSTRUMENTS

C-RED 2 Lite

Very High Speed and Stabilised SWIR Camera

Key Specifications

- ✓ 640 x 512 InGaAs sensor
- ✓ 15 µm pixel pitch
- ✓ SWIR 0.9 - 1.7 µm
- ✓ 76% peak QE
- ✓ Up to 600 fps full frame
- ✓ 28 e- readout noise
- ✓ Smart temperature stabilisation

Key Applications

- ✓ Adaptive optics
- ✓ Thermography
- ✓ Free Space Optical communications
- ✓ Quantitative spectral imaging
- ✓ Non-destructive inspection
- ✓ Additive manufacturing
- ✓ Laser beam profiling

www.oxinst.com

Introducing C-RED 2 Lite

The most recent addition to the C-RED family, C-RED 2 Lite is the temperature stabilized version of C-RED 2, able to run at 600 fps with <30 electrons readout noise. C-RED 2 Lite integrates a 640 x 512 TEC InGaAs detector with 15 µm pixel pitch for high resolution, which embeds an electronic shutter with integration pulses shorter than 5 µs.

C-RED 2 Lite is available either with a CameraLink® or USB 3 interface for data transmission. The camera design optimizes temperature management and enables precise sensor stabilization despite unavoidable environmental fluctuations, over extended periods of time.

In C-RED 2 Lite, the sensor is stabilized using a thermoelectric cooler. The camera internal design transfers the heat generated on the TEC hot side to the camera case homogeneously. With this design, a delta up to 25°C can be obtained between the case temperature and the sensor temperature.

Multiple passive and active thermal management solutions are also available: passive heat sinks to increase the exchange surface area with surrounding environment, external fan, or a hydraulic cooling plate to provide the highest cooling efficiency.

C-RED 2 Lite is specially designed for high flux, high speed SWIR applications such as laser beam profiling, hyperspectral imaging, thermography.

For more information on C-RED 2 Lite temperature management, read this article.

Hydraulic cooling plate (left) and passive heat sinks (right).

Thermography

SWIR cameras can be used to perform temperature measurements in the range of 300 to 1600°C with high accuracy, reducing errors on the evaluation of temperature compared to MWIR and LWIR. A thermography plug-in has been integrated into the First Light Vision software, allowing system calibration, temperature display and image statistics.

Thermography can be used for numerous applications such as monitoring industrial processes, control and maintenance of equipment and detection of temperature irregularities.

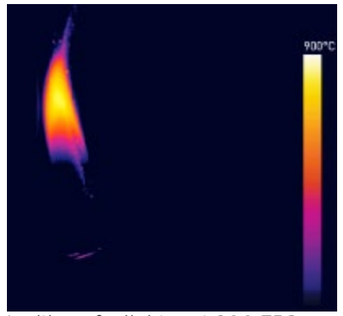

Ignition of a lighter at 600 FPS. High speed thermography Courtesy of First Light Imaging.

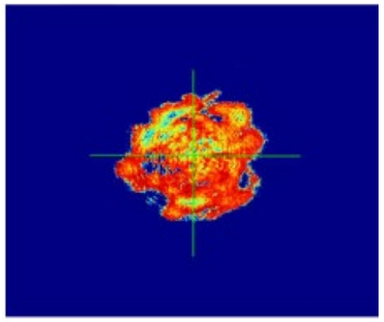

Laser beam image. Courtesy of First Light Imaging.

Laser beam profiling

Laser beam profiling is a technique used to measure and analyse the spatial characteristics of a laser beam. It provides information on intensity distribution, shape, and size. It has multiple applications, for example:

- ✓ Monitoring laser quality, this can include measuring spatial intensity distribution and temporal stability.
- ✓ Laser beam profiles can be used to gain a better understanding of laser physics and adjust laser parameters for optimal beam shaping.
- ✓ Studying the temporal evolution of a beam, for example to assess the impact of environmental parameters (temperature, wind, snow, etc.) on the propagation of a laser beam.

Hyperspectral imaging

Hyperspectral imaging combines digital imaging with spectroscopy, adding a spectral dimension to conventional imaging. It is a mature technique for the analysis of agricultural fields, forest, or mines. In the past few years, it has emerged as an important tool for the industrial analysis of products (drugs, plastics, food, etc.).

In the SWIR band (900-1700 nm) hyperspectral imaging is an emerging technology for production control. Simultaneous access to spatial and spectral characteristics of an object provide valuable information on the chemical composition relative to spatial proximity and distribution.

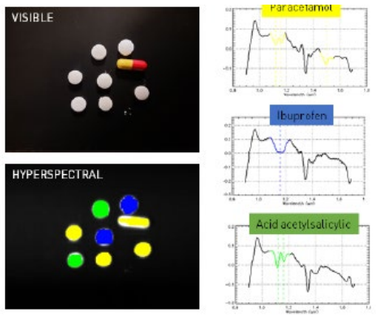

Mixed pills imaged with a visible camera and with a hyperspectral imaging system (false colour display). Courtesy of First Light Imaging

Technical Specifications

Specifications•[1]

Sensor Specifications		C-RED-2 Lite
Sensor size		640 x 512 pixels
Pixel pitch		15 µm
Maximum speed Full Frame		600 fps
Noise at high gain, Tint at 50 µs, 600 fps Full Frame		28 e- (typical •[2]) 35 e- (max.)
Dark Current @ + 5°C		24 ke-/p/s (typical •[2])
Quantization		14 bit
Quantum Efficiency		76% (peak) > 70% (between 1.0 to 1.6 µm)
Operability due to signal response (pixels with signal ± 0.3*median at 20°C)		> 99.8%
Image Full well capacity	low gain	1400 ke-
	med gain	115 ke-
	high gain	34 ke-
Maximum speed in 32 x 4 (min)		32066 fps •[3]
Maximum speed in 320 x 256		1779 fps

Features	C-RED-2 Lite
Output	USB 3.1 Gen 1 or CameraLink®
Optical interface	C-Mount, CS-Mount
Triggering	LVTTL Synchronization (5 V tolerant)
HDR mode	93 dB and 16 bits
Ambient operating temperature range•[2]	-40°C to 48°C
Sensor Operating Temperature (depending on setup and environment)	-40 to +60°C
Max ΔT° between case and sensor	25°C
Software	Graphical User Interface: First Light Vision Software Development Kit: (C, C++, C#, Python, MatLab) / LabVIEW / µManager

	Frame rate at 600 fps readout speed CameraLink® Output					
	Columns					
	32	64	128	256	512	640
Lines 4	32 066	31 512	30 458	28 548	25 367	24 029
8	28 108	27 348	25 945	23 532	19 840	18 397
16	22 542	21 631	20 015	17 413	13 819	12 526
32	16 147	15 254	13 736	11 455	8 599	7 646
64	10 302	9 596	8 440	6 801	4 898	4 297
128	5 975	5 509	4 765	3 752	2 632	2 291
256	3 247	2 975	2 547	1 978	1 367	1 184
512	1 697	1 549	1 319	1 016	697	602

For USB 3 Output: Max 9999 FPS

Product Drawings

Dimensions in mm [inches]
Weight: 460 g

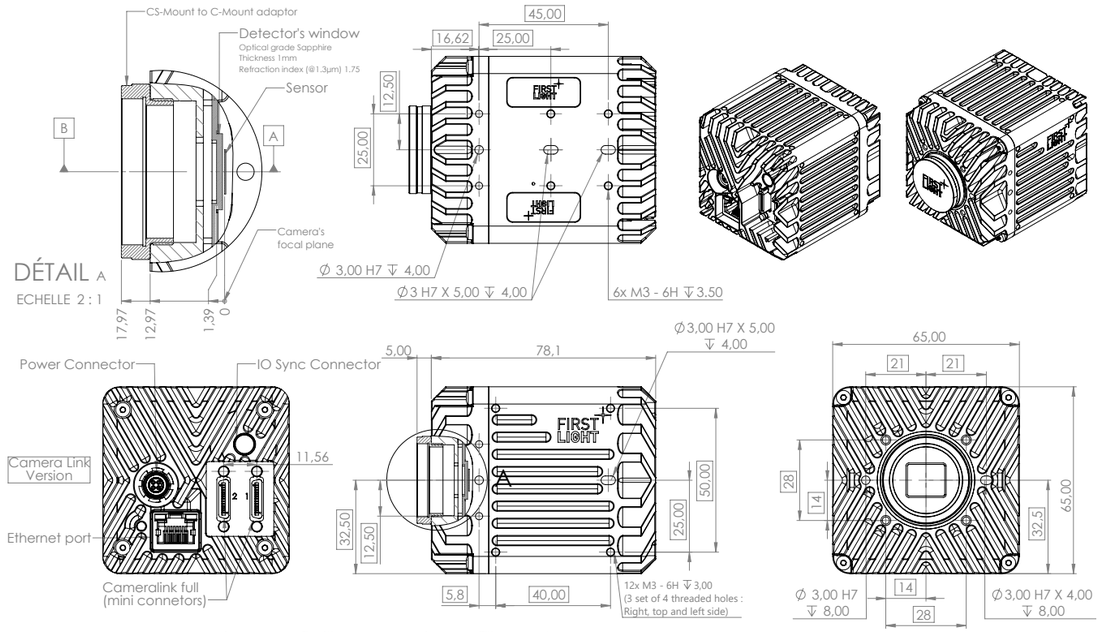

Quantum Efficiency (QE) Curve

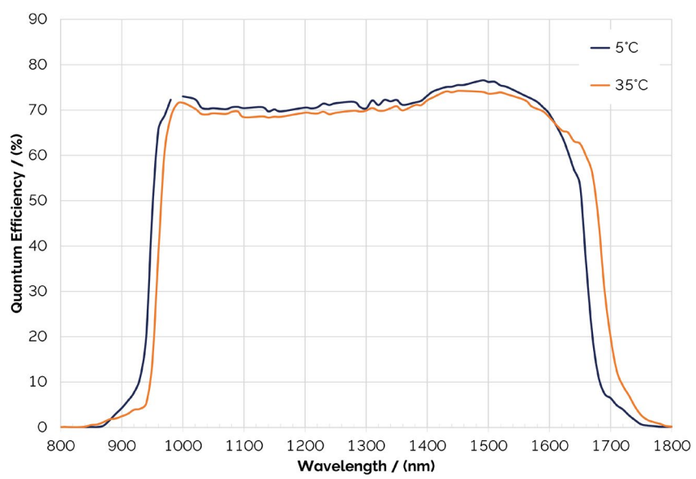

Creating The Optimum Product for You

Step 1. Select the camera type

Camera Type

Description	Code
C-RED 2 Lite CL: 640 x 512 InGaAs camera, 600 fps, <30 e- , Camera Link® interface	PAC-CRL-CLF-SSC
C-RED 2 Lite USB: 640 x 512 InGaAs camera, 600 fps, <30 e-, USB3 interface	PAC-CRL-USB-SSC

Step 2. Select the required accessories

Accessories

Description	Order Code
Cooling pack	PAC-COO-200-000
Hydraulic cooling plate	ACC-HYD-CRL-000
Quick coupling set	ACC-QCS-CAM-001
Pair of synchro cables, 3 m open-ended	ACC-CAB-SYN-001
Synchro cable 1 m with x4 BNCs output	ACC-CAB-SYN-002
Camera Link® cables 5 m	ACC-CAB-CLF-000
Camera Link® cables 10 m	ACC-CAB-CLF-001
Matrix Grabber CL RAD EV 1G CLSF	ACC-GRA-CLF-000

Step 3. Software

Software

Your product is provided with the following software options:

Graphical User Interface: First Light Vision

Software Development Kit: (C, C++, C#, Python, MatLab) / LabVIEW / µManager

Meet the Extended Cameras Family

C-RED 2

Ultra high speed, low noise, short wave infrared camera, able to run at 600 fps with a readout noise under 30 electrons and a very low dark current <600 e-/p/s.

- ✓ Astronomy
- ✓ Adaptive Optics
- ✓ Fluorescence microscopy research
- ✓ Hyperspectral imaging
- ✓ Low visibility imaging
- ✓ Semicon inspection
- ✓ Quality / production control

Read More

C-RED 2 ER

C-RED 2 ER 1.9 µm and 2.2 µm are high speed extended InGaAs cameras for eSWIR imaging.

- ✓ Astronomy
- ✓ Adaptive Optics
- ✓ Life Sciences / Research
- ✓ Surveillance and Safety
- ✓ Long range imaging
- ✓ Hyper/Multispectral imaging
- ✓ Quality/Production control

Read More

C-RED 3

Specially designed for short exposure times applications, C-RED 3 is a very compact high speed VGA uncooled camera for short wave infrared (SWIR) imaging.

- ✓ Free space optical communications
- ✓ Semiconductor inspection
- ✓ Quality/production control
- ✓ Adaptive optics
- ✓ Laser beam profiling
- ✓ Hyperspectral imaging
- ✓ Thermography

Read More

C-RED One

C-RED One is an unique photon counting SWIR camera based on an e-APD MCT sensor (320x256 pixels), running at 3500 frames per second, for high-end scientific applications:

- ✓ Astronomy
- ✓ Adaptive Optics
- ✓ Space debris tracking
- ✓ Secure laser communications
- ✓ Long range surveillance and tracking
- ✓ Spectroscopy
- ✓ Hyperspectral imaging

Read More

Order Today

Need more information? At Andor we are committed to finding the correct solution for you. With a dedicated team of technical advisors, we are able to offer you one-to-one guidance and technical support on all Andor products. For a full listing of our local sales offices, please see: andor.oxinst.com/contact

Our regional headquarters are:

Europe
Belfast, Northern Ireland
Phone +44 (28) 9023 7126
Fax +44 (28) 9031 0792

North America
Concord, MA, USA
Phone +1 (860) 290 9211
Fax +1 (860) 290 9566

Japan
Tokyo
Phone +81 (3) 6744 4703
Fax +81 (3) 3446 8320

China
Beijing | Shanghai | Guangzhou
Phone +86 (400) 678 0609
Fax +86 (10) 5884 7901

Items shipped with your camera:
1x Camera (model as ordered)
1x Power supply
1x Power supply cable
1x USB cable (if USB interface)
1x C-Mount adaptor
1x Quick start guide

Minimum Computer Requirements:
RAM: 8 GB minimum
Processor: Intel® Core™ i5 or higher
Screen resolution: at least 1920 x 1080
See system requirements for more information.

Operating and Storage Conditions
- Operating Temperature: -40°C to 48°C •4
- Relative Humidity: < 80% (non-condensing)
- Storage Temperature: -40°C to 70°C

Power Requirements
- 85 – 264 VAC 47 - 63 Hz
- Max. power consumption: 25 W

Note
Oxford Instruments reserves the right to alter without notice the specification, design or conditions of supply of any product or service.
Original document in English

© Oxford Instruments

Footnotes: Specifications are subject to change without notice
1. Figures are typical unless otherwise stated.
2. Typical refers to the median value from a large set of cameras.
3. Tested with cameralink and Zebra frame grabber.
4. C-RED 2 Lite integrates an automated thermal protection system which monitors all available temperature probes and automatically shuts the camera down to protect its electrical components when temperatures exceed their allowed range.

C-RED2LITESS 0926 R1